FEATURES

- 150Watts peak pulse power (tp = 8/20μs)
- Ultra low leakage: nA level
- Ultra low capacitance
- Working voltages : 3.3 V
- REACH & SVHC Compliant
- Halogen Compliant

APPLICATIONS

- Cell Phone Handsets andAccessories
- Microprocessor based equipment
- Portable Instrumentation
- Personal Digital Assistant(PDA)

SOD-523

Marking

IEC COMPATIBILITY

- IEC61000-4-2 (ESD) ±25kV (air), ±15kV (contact)
- IEC61000-4-4 (EFT) 40A (5/50ns)

APPROVALS

RoHS	Compliance with 2011/65/EU
HF	Compliance with IEC61249-2-21:2003

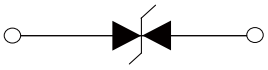

Schematic Symbol

THERMAL CONSIDERATIONS

Symbol	Parameter	Value	Unit
P_{pp}	Peak Pulse Power (tp=8/20μs waveform)	150	Watts
T_J	Operating Temperature Range	-40 ~ +125	°C
T_{STG}	Storage Temperature Range	-55 ~ +150	°C

ELECTRICAL CHARACTERISTICS

Symbol	Parameter	Condition	Min.	Typ.	Max.	Unit
V_{RWM}	Reverse Stand-off Voltage				3.3	V
V_{BR}	Reverse Breakdown Voltage	I_T=1mA	4.0			V
I_R	Reverse Leakage Current	V_{RWM}=3.3V			100	nA
V_C	Clamping Voltage	I_{PP}=1A,tp=8/20μs		11	13	V
V_C	Clamping Voltage	I_{PP}=5A,tp=8/20μs		25	30	V
I_{PP}	Peak Pulse Current	tp=8/20μs			5	A
C_J	Off State Junction Capacitance	V_R=0V, f=1MHz		0.25	0.40	pF

CHARACTERISTIC CURVES

8/20μs Pulse Waveform

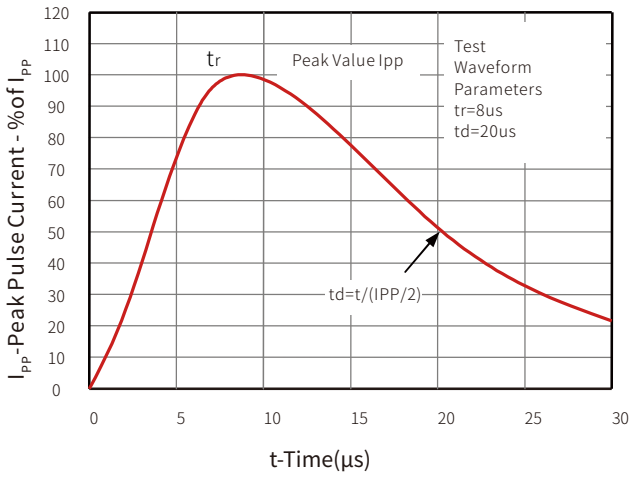

ESD Pulse Waveform (according to IEC 61000-4-2)

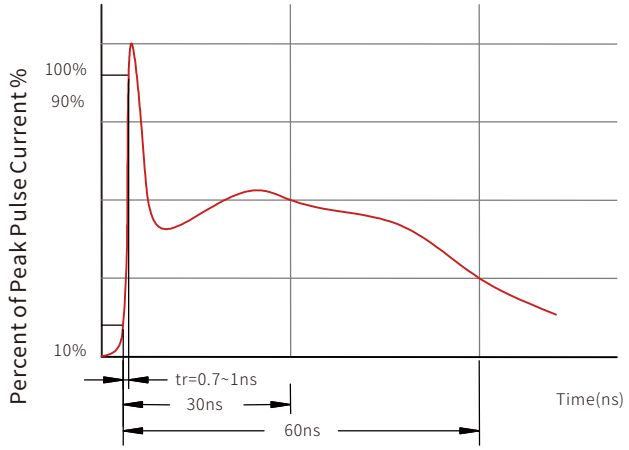

SOLDERING PARAMETERS

Reflow Condition		Lead–free assembly
Pre Heat	Temperature Max ($T_{s(min)}$)	150°C
	Temperature Max ($T_{s(max)}$)	200°C
	Time (min to max) (t_s)	60 – 180 secs
Average ramp up rate (Liquidus Temp (T_L) to peak		3°C/second max
$T_{S(max)}$ to T_L - Ramp-up Rate		3°C/second max
Reflow	Temperature (T_L) (Liquidus)	217°C
	Time (min to max) (t_L)	60 – 150 seconds
Peak Temperature (T_P)		260°C
Time within 5°C of actual peak Temperature (t_p)		20 – 40 seconds
Ramp-down Rate		6°C/second max
Time 25°C to peak Temperature (T_P)		8 minutes max.
Do not exceed		260°C

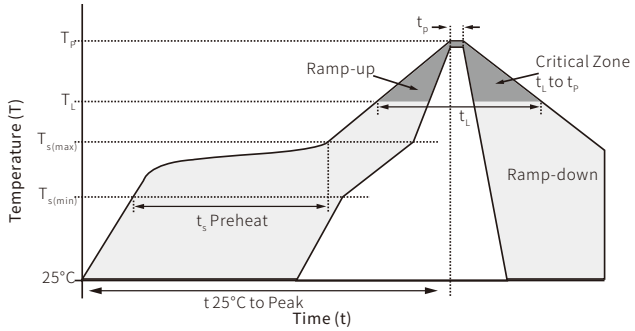

SOD-523 PACKAGE INFORMATION

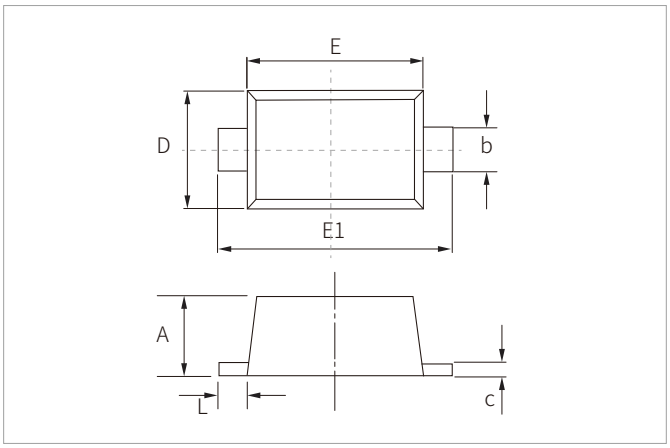

Ref.	Millimeters		Inches	
	Min.	Max.	Min.	Max.
A	0.50	0.80	0.020	0.031
b	0.25	0.35	0.010	0.014
c	0.07	0.20	0.003	0.008
D	0.70	0.90	0.028	0.035
E	1.10	1.30	0.043	0.051
E1	1.50	1.70	0.059	0.067
L	0.15	0.25	0.006	0.010

RECOMMENDED PAD LAYOUT DIMENSIONS

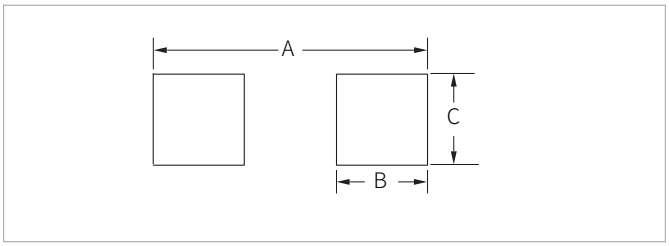

Ref.	Millimeters	Inches
	Min.	Min.
A	2.00	0.0787
B	0.60	0.0236
C	0.70	0.0276

ORDERING INFORMATION

Part Number	Component Package	QTY/Reel	Reel Size
SE5D15B3.3UA	SOD-523	3000PCS	7”

Headquarters
No.3387 Shendu Road
Pujiang I&E Park
Minhang Shanghai China
201000

Hotline
400-021-5756

Web
Https://www.semiware.com

Sales Center
Tel: 86-21-3463-7458
Email: sales18@semiware.com

Customer Service
Tel: 86-21-5484-1001
Email: sales17@semiware.com

Technical Support
Tel: 86-21-3463-7654
Email: fae01@semiware.com

Complaint & Suggestions
Tel: 86-21-3463-7172
Ext: 8868
Email: cs03@semiware.com

By QR Code
Website
Wechat

To find your local partner within Semiware' s global website: www.semiware.com

© 2022 Semiware Semiconductor Inc.

The content of this document has been carefully checked and understood. However, neither Semiware nor its subsidiaries assume any liability whatsoever for any errors or inaccuracies of this document and the consequences thereof. Published specifications are subject to change without notice. Product suitability for any area of application must ultimately be determined by the customer. In all cases, products must never be operated outside their published specifications. Semiware does not guarantee the availability of all published products. This disclaimer shall be governed by substantive Chinese law and resulting disputes shall be settled by the courts at the place of business of Semiware. Latest publications and a complete disclaimer can be downloaded from the Semiware website. All trademarks recognized.